Vibration Test System TV 59360/AIT-440

S 59360/AIT-440 (Example drawing) mm[inch]

TECHNICAL PARAMETERS Vibration exciter S 59360/AIT-440

Rated peak force $Sine_{pk}/Random_{RMS}/Shock_{pk}$ [1]	60000/60000/180000 N
Frequency range	5 - 2400 Hz
Main resonance frequency	2100 Hz
Max. displacement Peak-Peak[2]	50.8 mm
Max. velocity Sine/Random/Shock	2.0/2.0/3.5 m/s
Max. acceleration Sine/Random/Shock[1]	100/90/300 g
Suspension stiffness	175 N/mm
Effective moving mass	58 kg
Max. weight tested	910 kg
Weight	4500 kg
Magnetic stray field	2.5 mT
Armature diameter	440 mm
Required compressed air supply	Min. 600 kPa
Interlocks	Temperature, displacement, water flow rate, differential pressure, overcurrent, compressed air, conductance

1) theoretical maximum shock value. Depends on payload, amplifier, shock and shock width
2) optional displacement of 76.2 mm (3 inch) for transient applications, 63.5mm (2.5") for Sine and Random. Impact by moving to static mass and frequency is possible

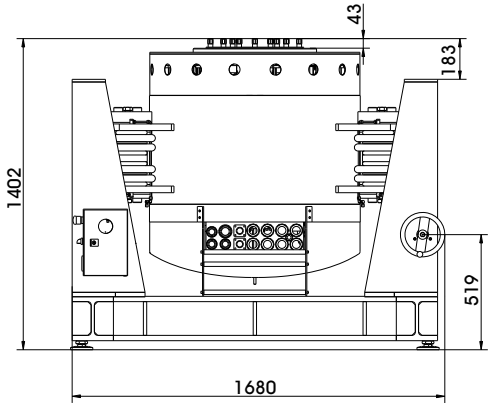

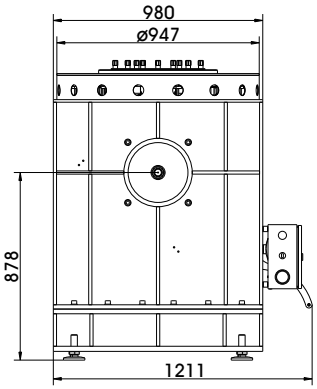

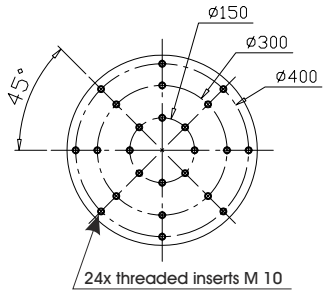

Armature 440 (Standard)

SCOPE OF DELIVERY, OPTIONS AND FEATURES OF THE SYSTEM

Scope of delivery:
- Vibration exciter 60 kN
- Trunnion mount with integrated vibration isolation (AIT)
- Power amplifier 105 kVA
- Cooling unit with integrated hydraulic unit
- Connection cables (each 10 m)
- Water hoses with self-sealing couplings (each 10 m)
- Hydraulic hoses with self-sealing couplings (each 10 m)
- Compressed-air hose NW 7.2 (Standard) (10 m)

Options:
- 3 inch (76.2 mm) displacement
- Different hole pattern of armature (different pitch diameter and/or thread inserts) at customers request
- Thermobarrier (-40°C to +140°C)
- Chamber leadthrough
- Climatic chamber support kit
- Remote control (Software)
- Cable/Hose extension
- Factory acceptance test

Features:
- Vibration isolation < 3 Hz (AIT)
- Fully automatic pneumatic load compensation
- Frictionless hydrostatic bearing (Dual Bearing)
- AIT fixable
- Automatic centering of the AIT-System and the armature
- Degauss kit to reduce stray magnetic field
- Shaker-water circuit with overpressure
- Automatic permanent monitoring of conductance
- Integrated mains switch and line filter
- Noise-button
- Energy-saving-mode
- Input voltage analyzer
- Voltage clipping limiter to avoid clipping
- 3 Sigma peak current
- Made in Germany
- Servicehotline (Monday-Friday)

TIRA GmbH Eisfelder Str. 23/25, 96528 Schalkau, Germany • Tel.: +49 36766 280-0 • Fax: +49 36766 280-99 • Internet: www.tira-gmbh.de • Email: st@tira-gmbh.de

Subject to modifications

Vibration Test System TV 59360/AIT-440

TECHNICAL PARAMETERS Power Amplifier A 5 40 3 158

Output power$_{RMS}$	105000 VA
Frequency range	DC - 4 kHz
Voltage$_{RMS}$, max.	150 V
Current$_{RMS}$, max.	1050 A
Signal input voltage$_{RMS}$ (switchable)	2.5/5/10 V
Distortion	< 0.7 %
Signal to noise ratio	> 90 dB
Field voltage, max.	155 V
Field current, max.	260 A
Weight	2200 kg
Dimensions (WxHxD)	2840 x 2320 x 1050 mm
Power supply (Standard)	3~ / N / PE 400 V±5% 50 Hz Direct connection (Terminal block)
Recommended fuse protection (Standard)	200 A slow
Max. power consumption at 400 V (incl. cooling unit)	100 kVA
Interlocks:	Overload, temperature, clipping and more

Features:
High Signal to noise ratio of >90 dB
Mains switch
Lo-Field/Hi-Field button (Energy-saving mode)
Integrated field supply
Integrated line filter
ESD-monitoring (Protection of the system against damage)
Noise-button
Input voltage analyzer
Voltage clipping limiter to avoid clipping
3 Sigma peak current
Field voltage/Field current variable according to customer spec.

TECHNICAL PARAMETERS Cooling unit C 59410

Environmental conditions:	
Temperature	5 - 30 °C
Relative humidity	10 - 80 %
Energy transfer	max. 3 kW
Process water:	
Temperature	5 - 15 °C
Volume flow at max. supply temperature	10 m³/h
Working pressure: supply - static	≤ 8 bar (≤ 800 kPa)
Working pressure: dynamic differential pressure	≥ 3 bar (≥ 300 kPa)
Dissipated heat flow	max. 110 kW
Nominal width of supply pipes	R 1 1/4 IT (32 mm)
pH value	7 ± 1
Dimensions of dirt particles	< 25 µm
Water hardness (total/carbonate)	< 1.4 mmol/l / < 0.9 mmol/l
Weight	550 kg
Dimensions (WxHxD)	600 x 2140 x 970 mm

Features:
Closed system --> No pollution and no water loss by evaporation
The system works with a higher pressure --> No cavitation interferences at the measuring signal
Manometers and flow meters at several places within the circuits
Integrated conductance monitoring and demineralisation
Fine filter with pollution monitoring
Reduction of water consumption at part load by controlling of the process water flow
Self-sealing couplings (free from leakage)
Optional: Hose length according to customer specs (up to 20 m)
Optional: Monitoring of all data, warnings and error messages at the PC

TIRA GmbH Eisfelder Str. 23/25, 96528 Schalkau, Germany • Tel.: +49 36766 280-0 • Fax: +49 36766 280-99 • Internet: www.tira-gmbh.de • Email: st@tira-gmbh.de

Subject to modifications